SERVICE MANUAL

SPLIT TYPE AIR CONDITIONER (50Hz)

DUCT type

Refrigerant R407C

Models

Indoor unit	Outdoor unit
ARG90ELC3	AOG90EPD3L
ARG90TLC3	AOG90TPC3L
ARY90ELC3	AOY90EPD3L
ARY90TLC3	AOY90TPC3L

CONTENTS

SPECIFICATIONS 1
OUTLINE AND DIMENSIONS 2
CIRCUIT DIAGRAM 5
INDOOR P. C. BOARD CIRCUIT DIAGRAM 9
OUTDOOR P. C. BOARD CIRCUIT DIAGRAM 11
ERROR CONTENTS 13
REFRIGERANT SYSTEM DIAGRAM 14
DISASSEMBLY ILLUSTRATION 15
PARTS LIST 22

SPECIFICATIONS

INDOOR UNIT		ARG90ELC3 ARY90ELC3	ARG90TLC3 ARY90TLC3
OUTDOOR UNIT		AOG90EPD3L AOY90EPD3L	AOG90TPC3L AOY90TPC3L
COOLING CAPACITY		25.4 - 25.4 kW	24.8 - 25.4 kW
HEATING CAPACITY		-----	28.9 - 29.5 kW

ELECTRICAL DATA

POWER SOURCE		380 - 415 V	
FREQUENCY		50 Hz	
RUNNING CURRENT	COOLING	17.5 - 17.0 A	19.5 - 19.5 A
	HEATING	-----	19.5 - 19.5 A
INPUT WATTS	COOLING	10.5 - 10.5 kW	12.2 - 12.5 kW
	HEATING	-----	12.2 - 12.5 kW
EER (kW/kW)	COOLING	2.42 - 2.42	2.03 - 2.03
	HEATING	-----	2.37 - 2.36
MOISTURE REMOVAL (ℓ/hr)		7.5	
AIR CIRCULATION-Hi (m^3/hr)		4,300	

COMPRESSOR

TYPE	Hermetic type, 2 pole, 3-phase, Induction motor, Scroll	
DISCRIMINATION	ZRT122K3E-TFD	
REFRIGERANT (R407C)	6,000 g	7,000 g

FAN MOTOR

INDOOR	DISCRIMINATION	MFA-90JQH
	POWER SOURCE	380 - 415 V
	HIGH-SPEED	980 r.p.m.
OUTDOOR	DISCRIMINATION	MFB-90NTN
	POWER SOURCE	380 - 415 V
	HIGH-SPEED	730 r.p.m.
	LOW-SPEED	360 r.p.m.

DIMENSIONS

INDOOR	H x W x D	450 x 1,550 x 700 mm
OUTDOOR		1,380 x 1,300 x 650 mm

WEIGHTS

INDOOR	GROSS / NET	100 / 85 kg	100 / 85 kg
OUTDOOR		280 / 243 kg	282 / 245 kg

REFRIGERANT CHARGE

FULL CHARGE AMOUNT Pipe Length	30m	6,000g	7,000g
	40m	6,500g	8,000g
	50m	7,000g	9,000g

O U T L I N E A N D D I M E N S I O N S

Models : ARG90ELC3
ARG90TLC3
ARY90ELC3
ARY90TLC3

(Unit : mm)

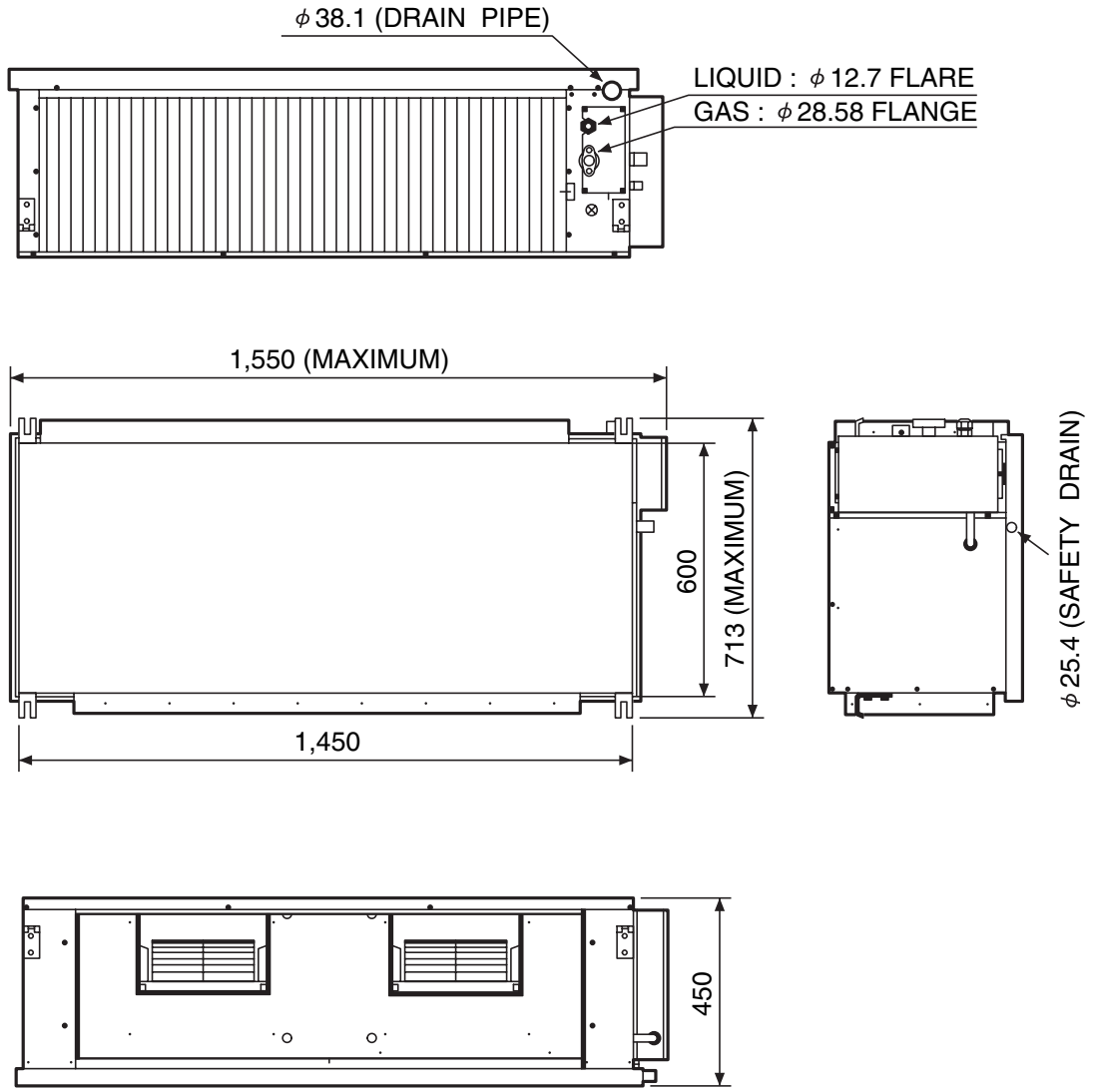

Models : AOG90EPD3L
AOG90TPC3L
AOY90EPD3L
AOY90TPC3L

(Unit : mm)

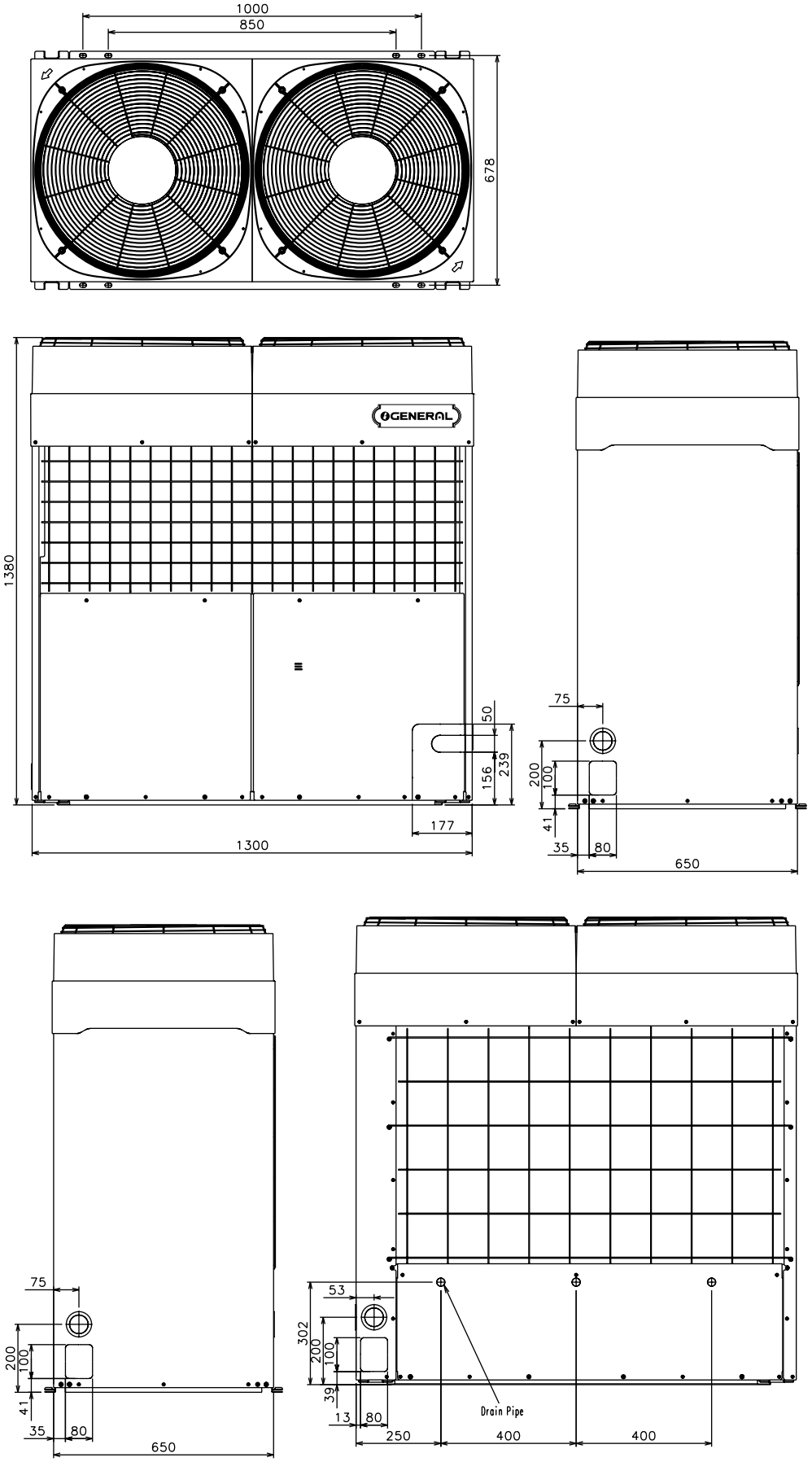

SERVICE SPACE FOR OUTDOOR UNIT

- Height of side wall is free.
- Height (H) of front wall is less than 1,200mm.
- When total height of outdoor unit is lower than front wall, add dimension h to service space for dimensions L1 and L2.

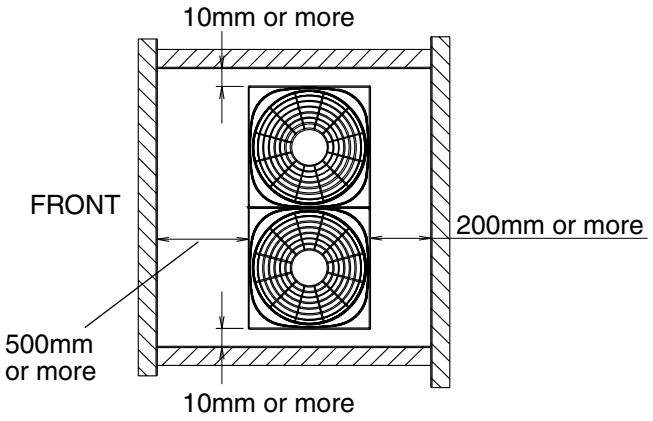

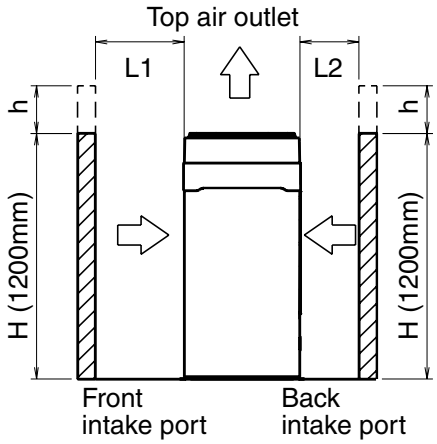

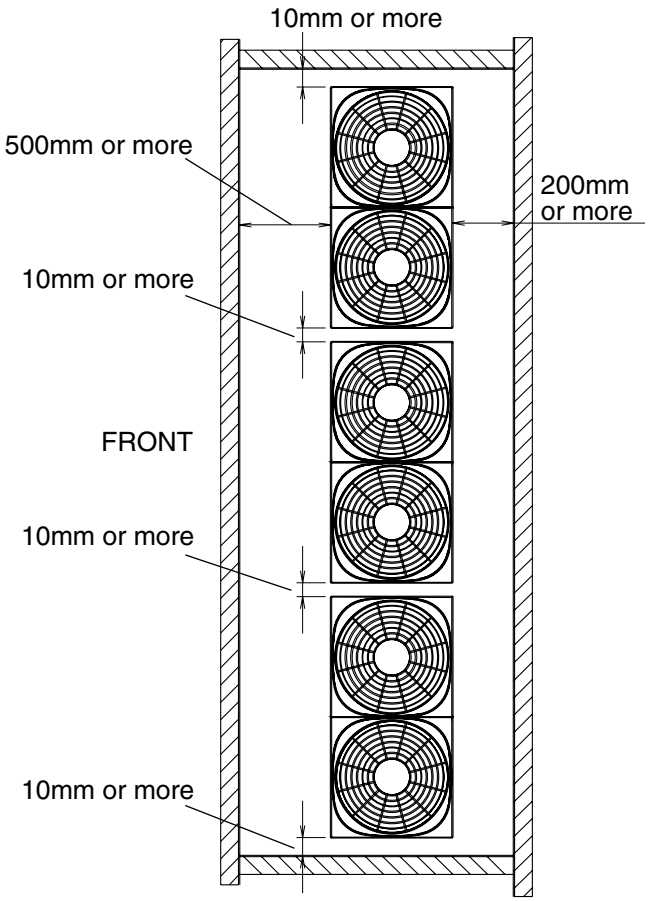

REFRIGERANT SYSTEM DIAGRAM

Models : ARG90ELC3 / AOG90EPD3L
ARY90ELC3 / AOY90EPD3L

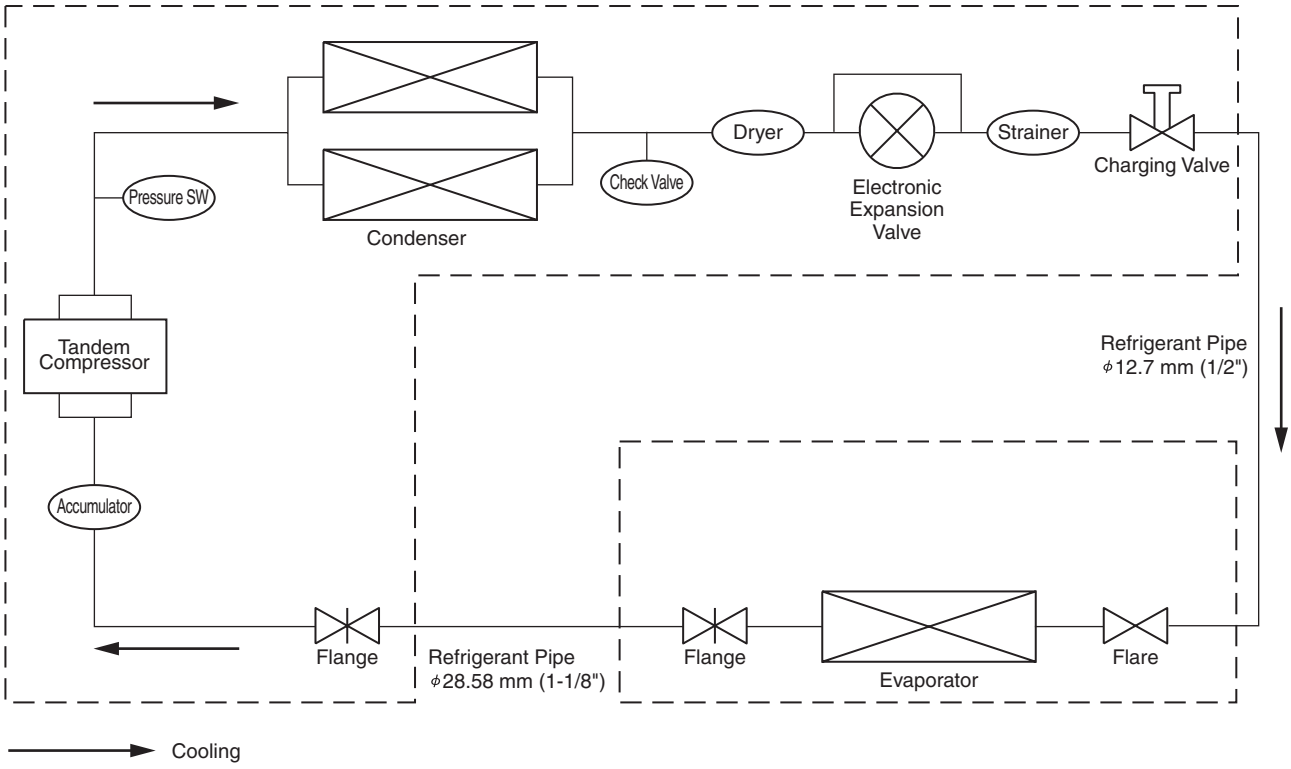

Models : ARG90TLC3 / AOG90TPC3L
ARY90TLC3 / AOY90TPC3L

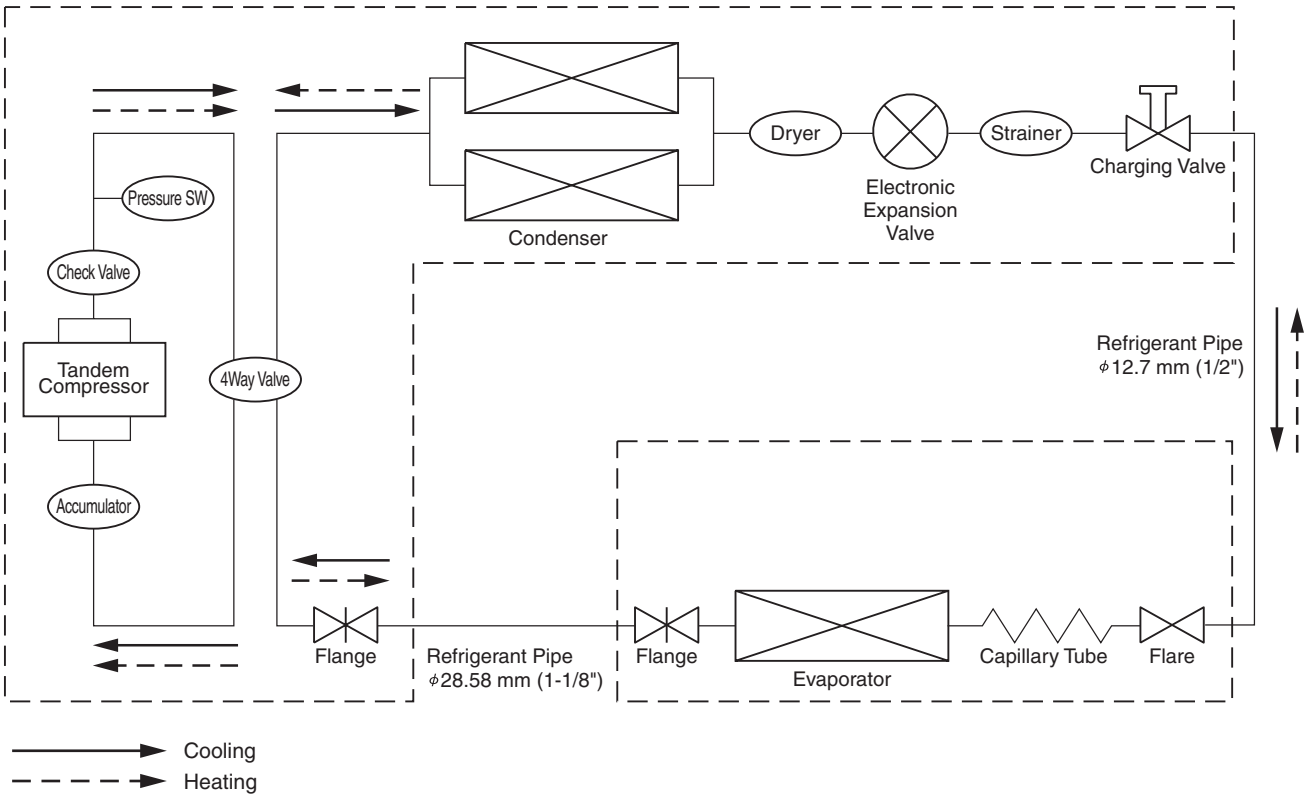

CIRCUIT DIAGRAM

Models :
ARG90ELC3
ARY90ELC3
ARG90TLC3
ARY90TLC3

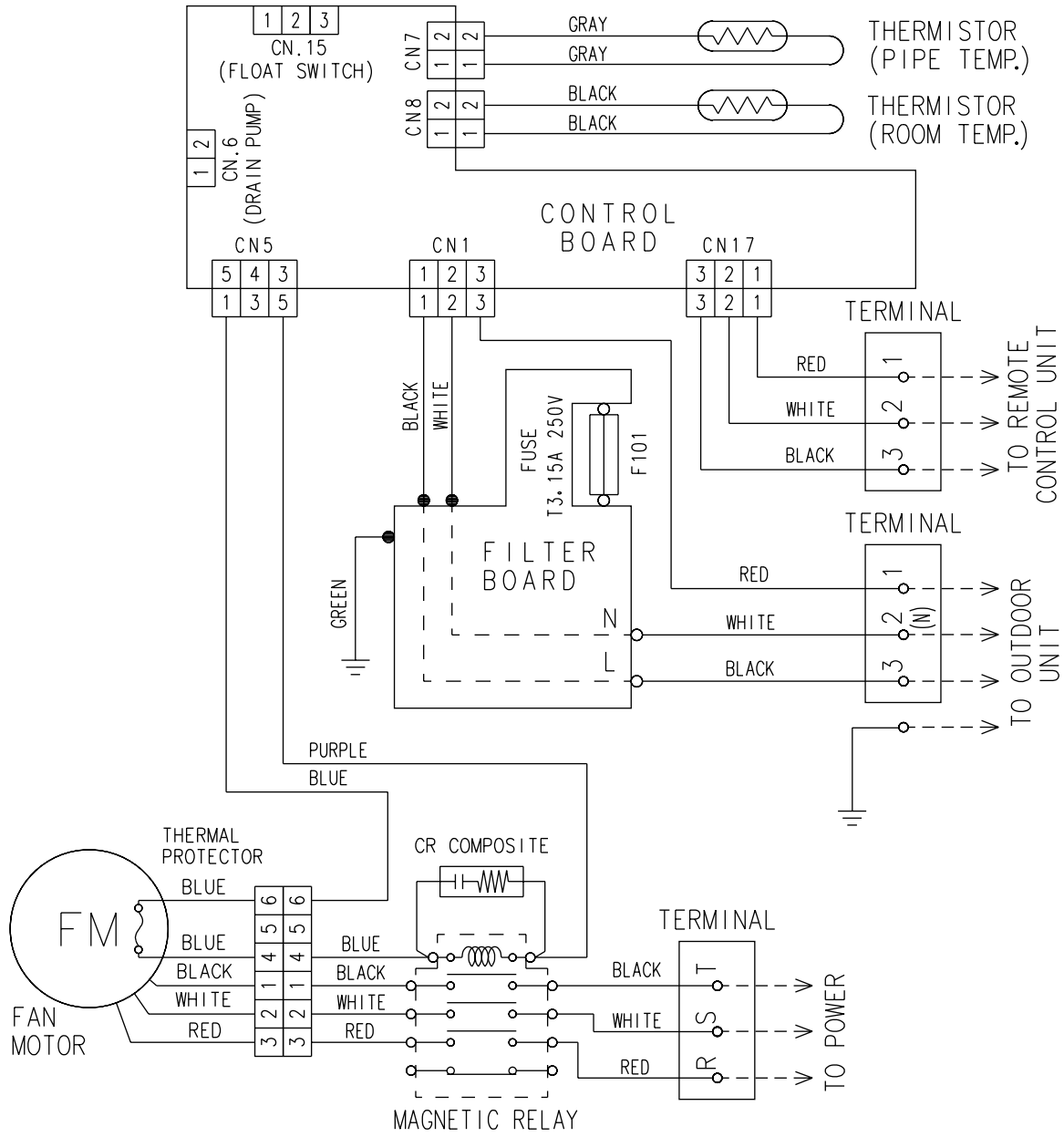

Model : AOG90EPD3L
AOY90EPD3L

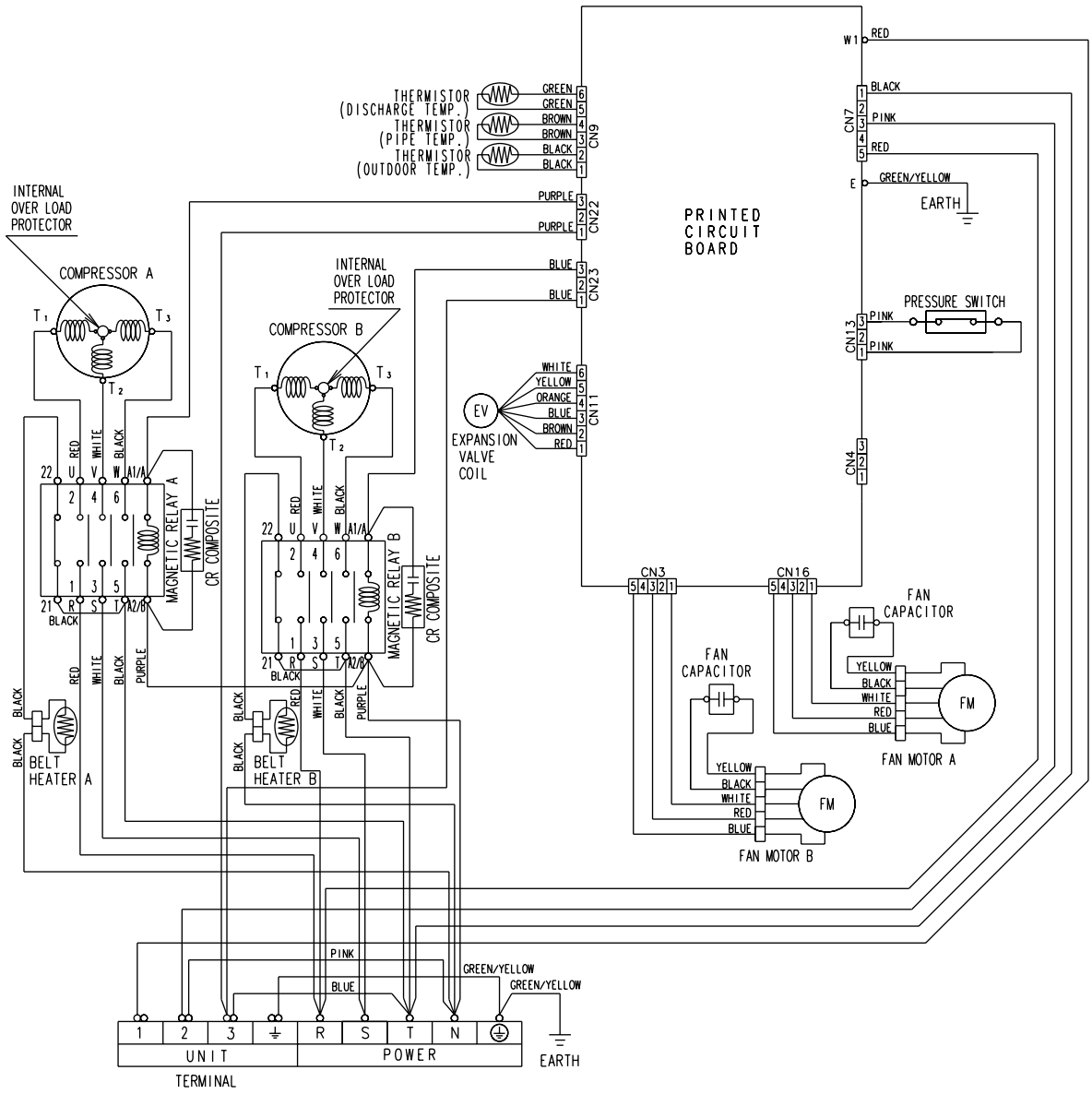

Model : AOG90TPC3L
AOY90TPC3L

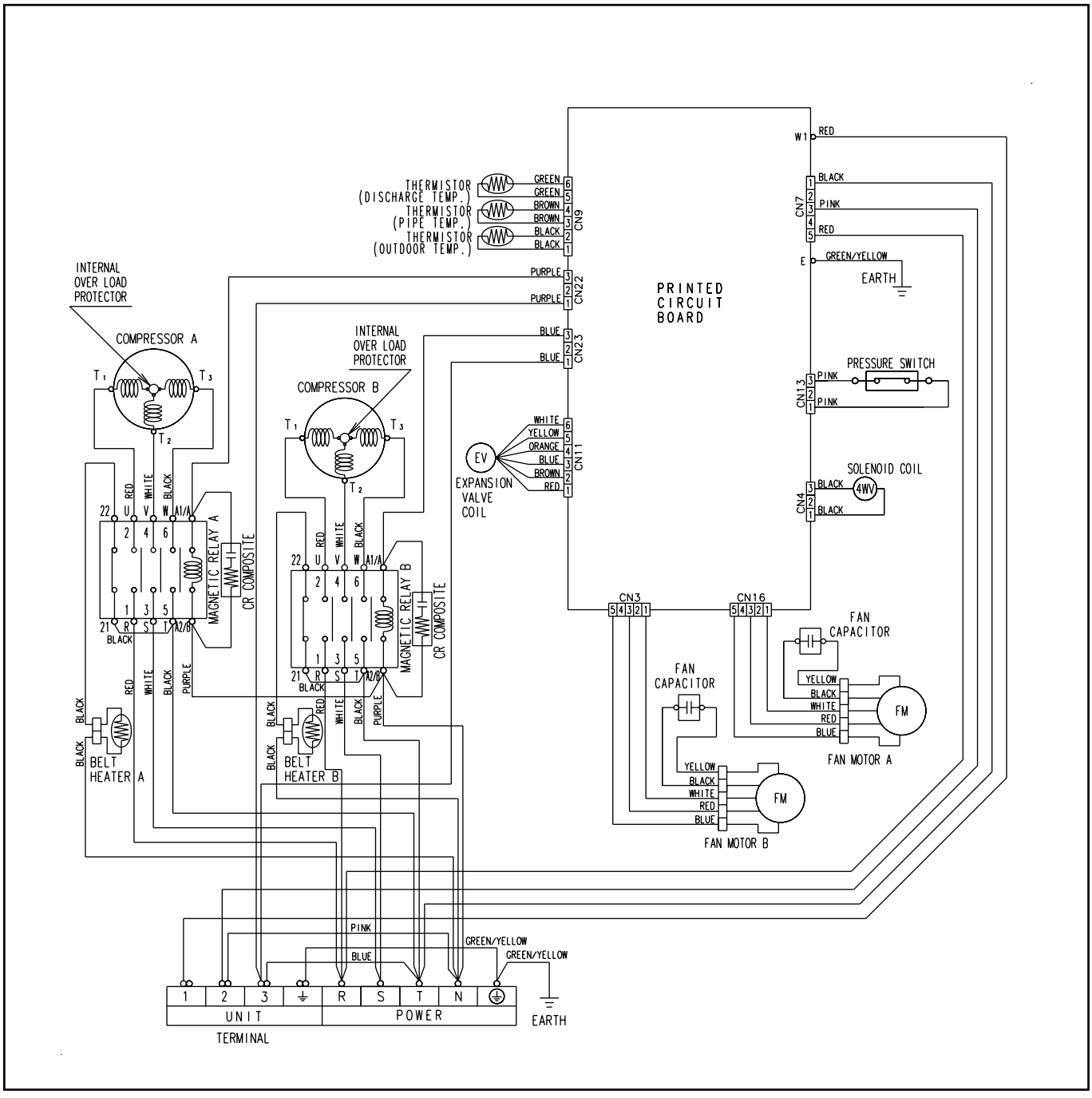

INDOOR PCB CIRCUIT DIAGRAM

Models :
ARG90ELC3
ARY90ELC3
ARG90TLC3
ARY90TLC3

CONTROLLER PCB ASSY
ARG(Y)90ELC3 : EZ-00302HSE-C
ARG(Y)90TLC3 : EZ-0031HSE-C

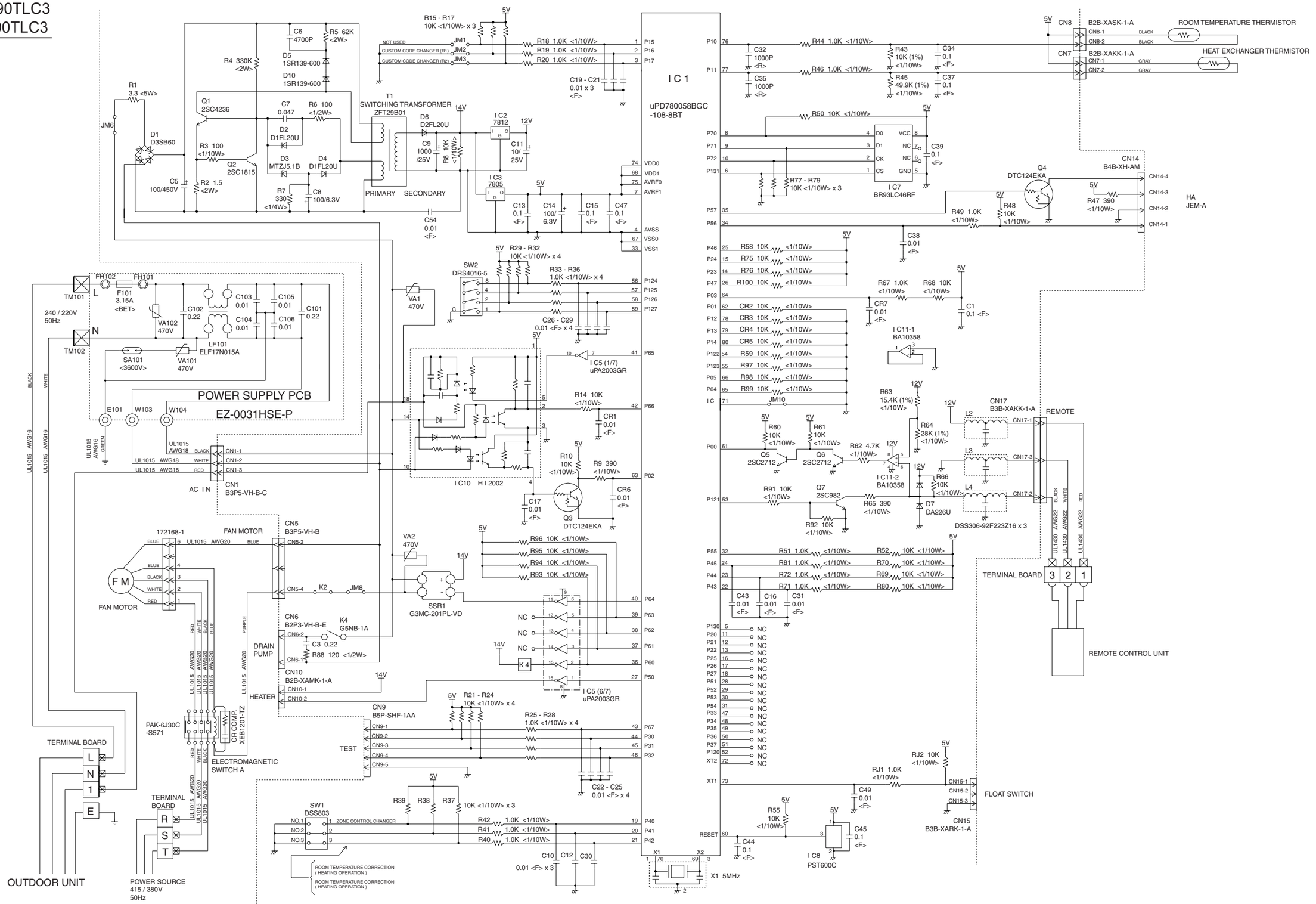

OUTDOOR PCB CIRCUIT DIAGRAM

Model : AOG90EPD3L
AOY90EPD3L

CONTROLLER PCB ASSEMBLY (MAIN PCB)

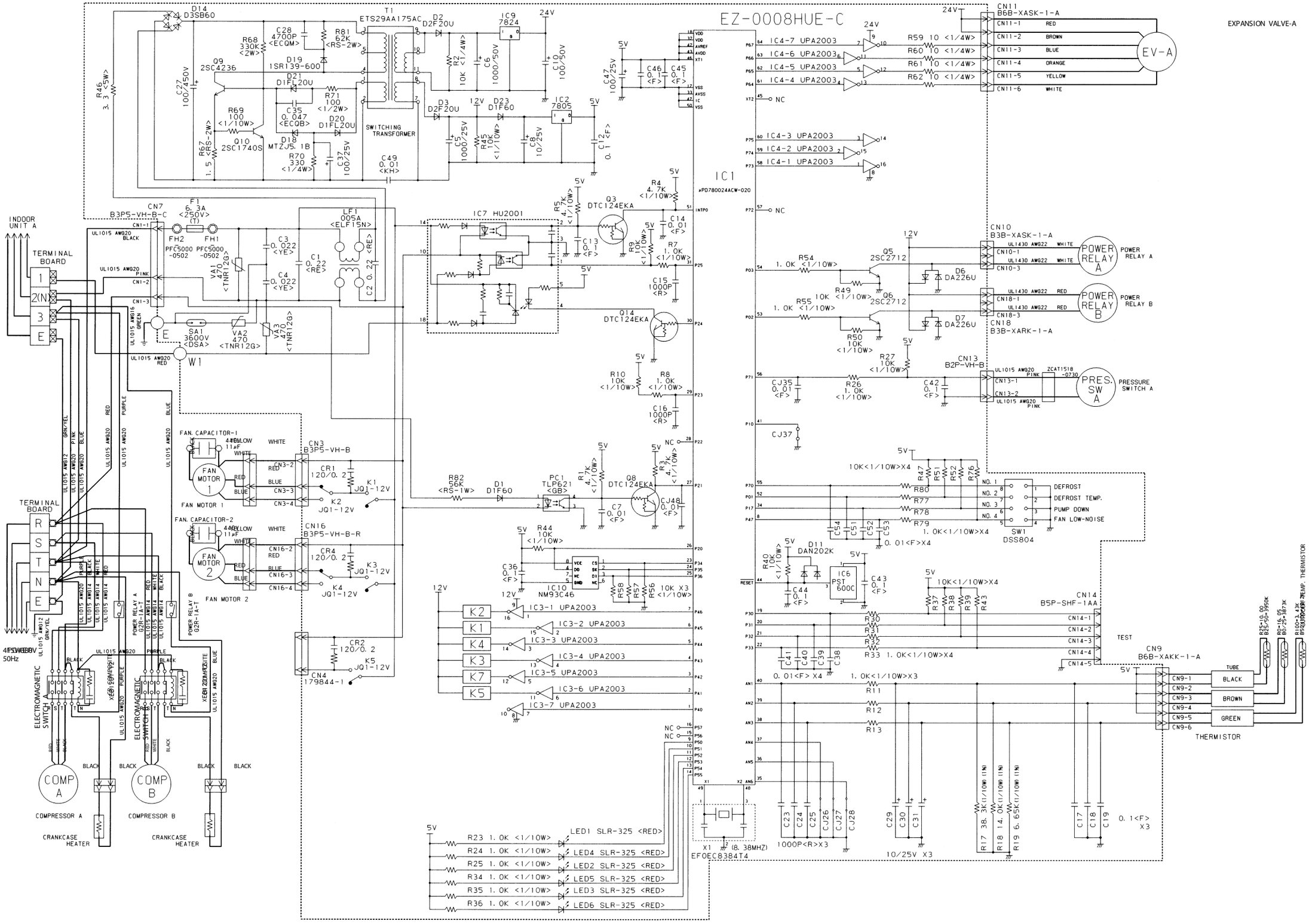

Model : AOG90TPC3L
AOY90TPC3L

CONTROLLER PCB ASSEMBLY (MAIN PCB)

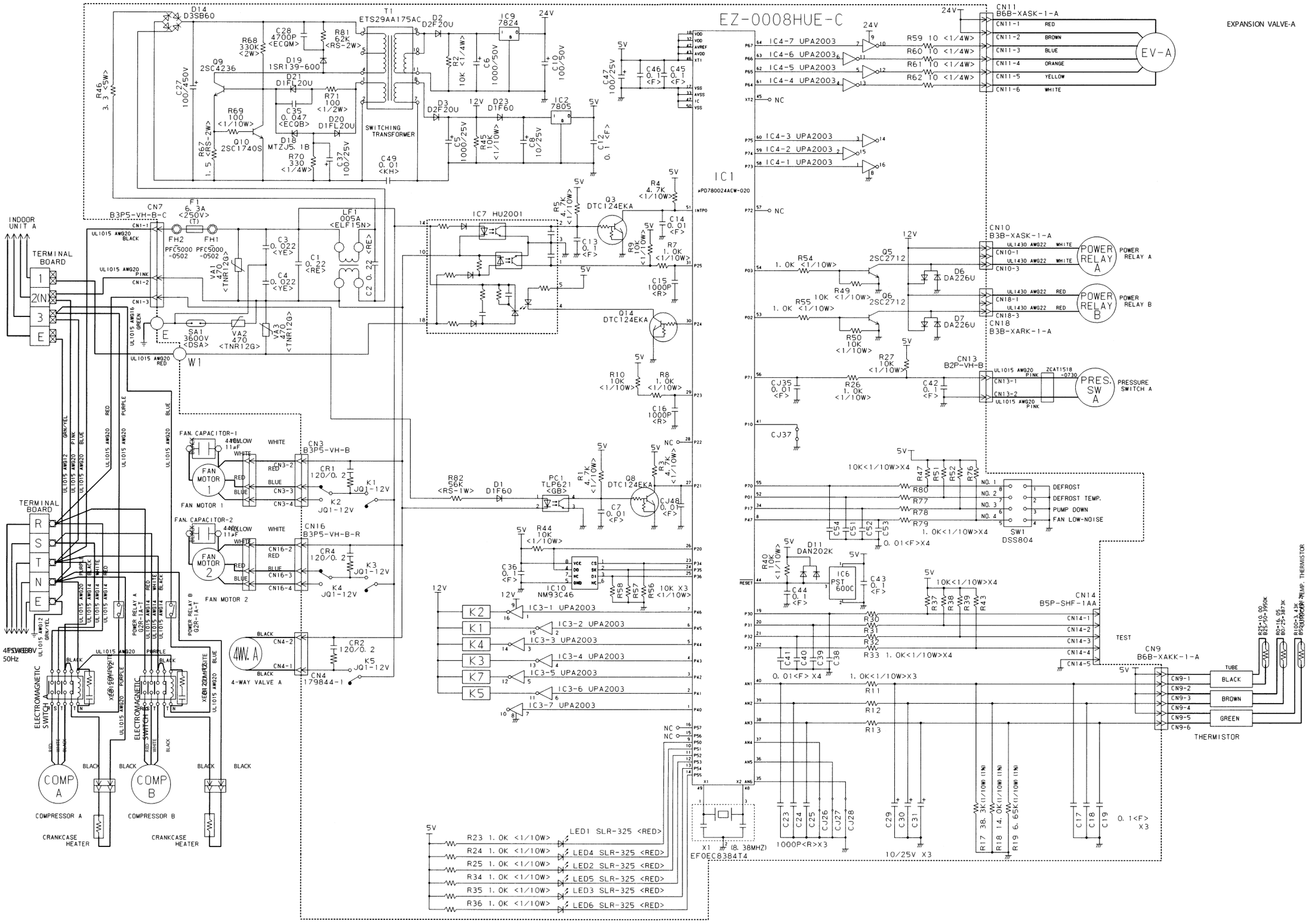

ERROR CONTENTS

1. REMOTE CONTROLLER

When EE : EE blinks at the current time display, there is an error inside the air conditioner. If the SET TIME button (▼) and TEMP./DAY button (▼) are pressed simultaneously for more than three seconds, the self diagnosis check will start and the error contents will be displayed at the current time display. When the operation lamp lights, press the START/STOP button and after operation lamp goes off, perform the same operation. Process the error contents by referring to (Table 1).

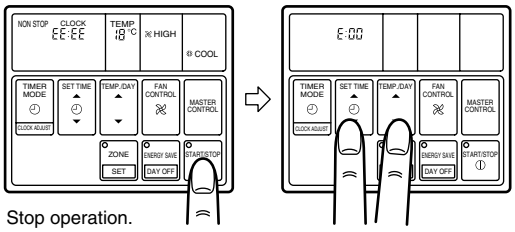

Stop operation.

Table 1

Error cord	Error contents
E:00	Communication error (indoor unit ←→ remote controller)
E:01	Communication error (indoor unit ←→ outdoor unit)
E:02	Room temperature sensor open
E:03	Room temperature sensor shortcircuited
E:04	Indoor heat exchanger temperature sensor open
E:05	Indoor heat exchanger temperature sensor shortcircuited
E:06	Outdoor heat exchanger temperature sensor open
E:07	Outdoor heat exchanger temperature sensor shortcircuited
E:08	Power source connection error
E:09	Float switch operated
E:0A	Outdoor temperature sensor open
E:0b	Outdoor temperature sensor shortcircuited
E:0C	Discharge pipe temperature sensor open
E:0d	Discharge pipe temperature sensor shortcircuited
E:0E	Outdoor high pressure abnormal
E:0F	Discharge pipe temperature abnormal
E:11	Model abnormal
E:12	Indoor fan abnormal
E:13	Outdoor signal abnormal
E:14	Outdoor EEPROM abnormal

To stop test running, press the START/STOP button.

For the operation method, refer to the operating manual and perform operation check.

Check that there are no abnormal sounds or vibration sounds during test running.

2003.06.17

2. OUTDOOR UNIT

When the outdoor temperature drops, the outdoor unit's fans may switch to low speed, or one of the fans may stop intermittently.

ERROR : Heat & Cool model (Reverse cycle) only

The LED lamps operate as follows (Table 2) according to the error contents.

The LED lamps are on the outdoor unit board.

Table 2

Error contents	LED1	LED2	LED3	LED4	LED5	LED6
Signal abnormal	–	–	X	○	X	X
Indoor unit abnormal	–	–	X	X	○	X
Discharge pipe temperature abnormal	–	–	X	X	X	○
Outdoor heat exchanger temperature abnormal	–	–	X	X	○	○
Outdoor temperature abnormal	–	–	X	○	X	○
Power source connection error	–	–	○	X	X	X
EEPROM abnormal	–	–	○	○	○	○
	◎	◎	◎	◎	◎	◎
Outdoor high pressure abnormal	○	–	–	–	–	–
Discharge pipe temperature abnormal	–	○	–	–	–	–

○ : 0.5s ON / 0.5s OFF (flash) X : OFF

◎ : 0.1s ON / 0.1s OFF (flash) – : Indefinite

When the fault is cleared, the LED lamp goes off.

However, for discharge pipe temperature abnormal and high pressure abnormal, the LED lamp lights continuously for 24 hours, as long as the power is not turned off.

ERROR LED DISPLAY LAYOUT

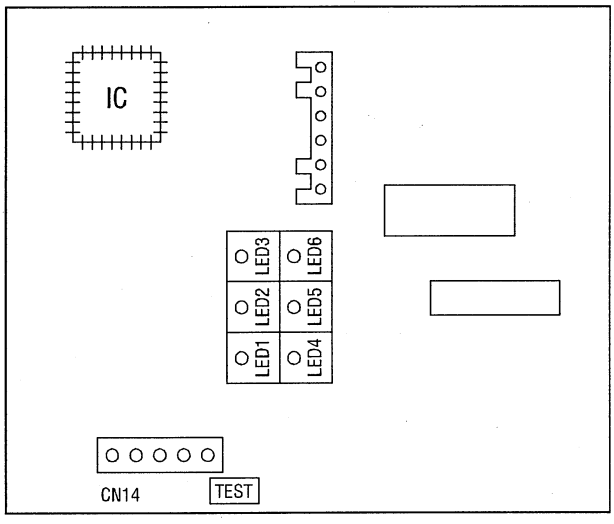

DISASSEMBLY ILLUSTRATION

Models :
AOG90EPD3L
AOY90EPD3L
AOG90TPC3L
AOY90TPC3L

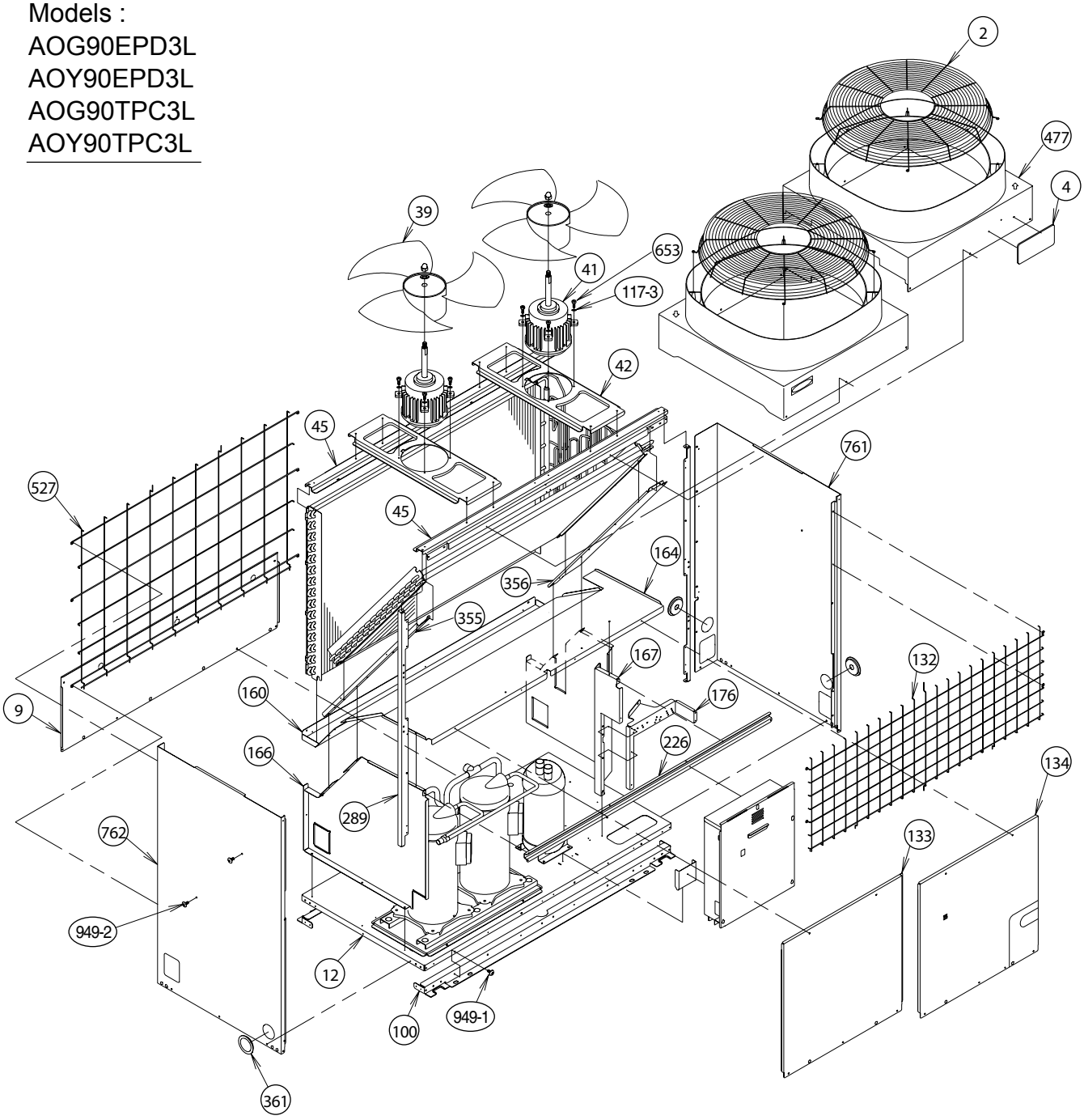

Models :
AOG90EPD3L
AOY90EPD3L

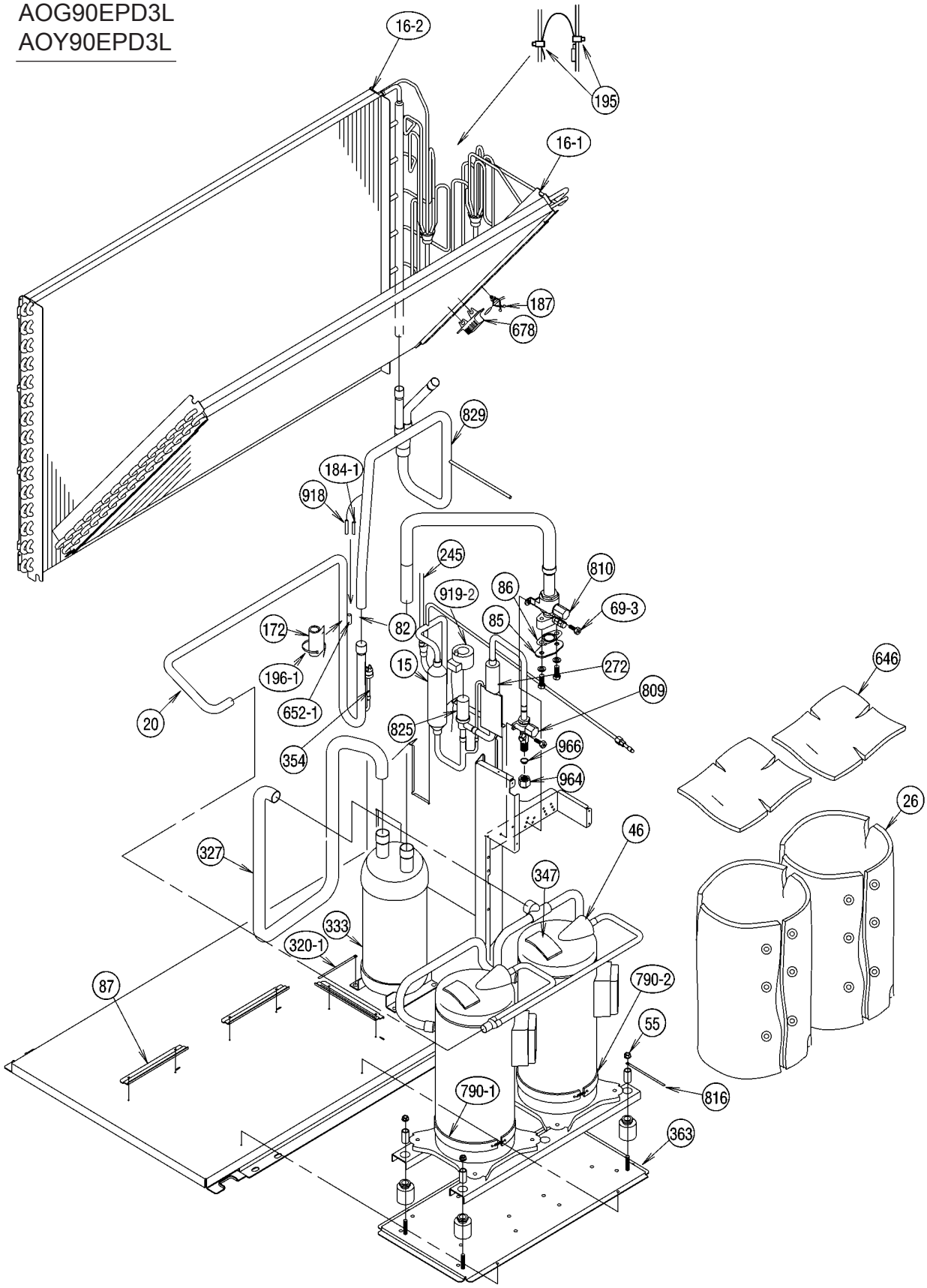

Model : AOG90TPC3L
AOY90TPC3L

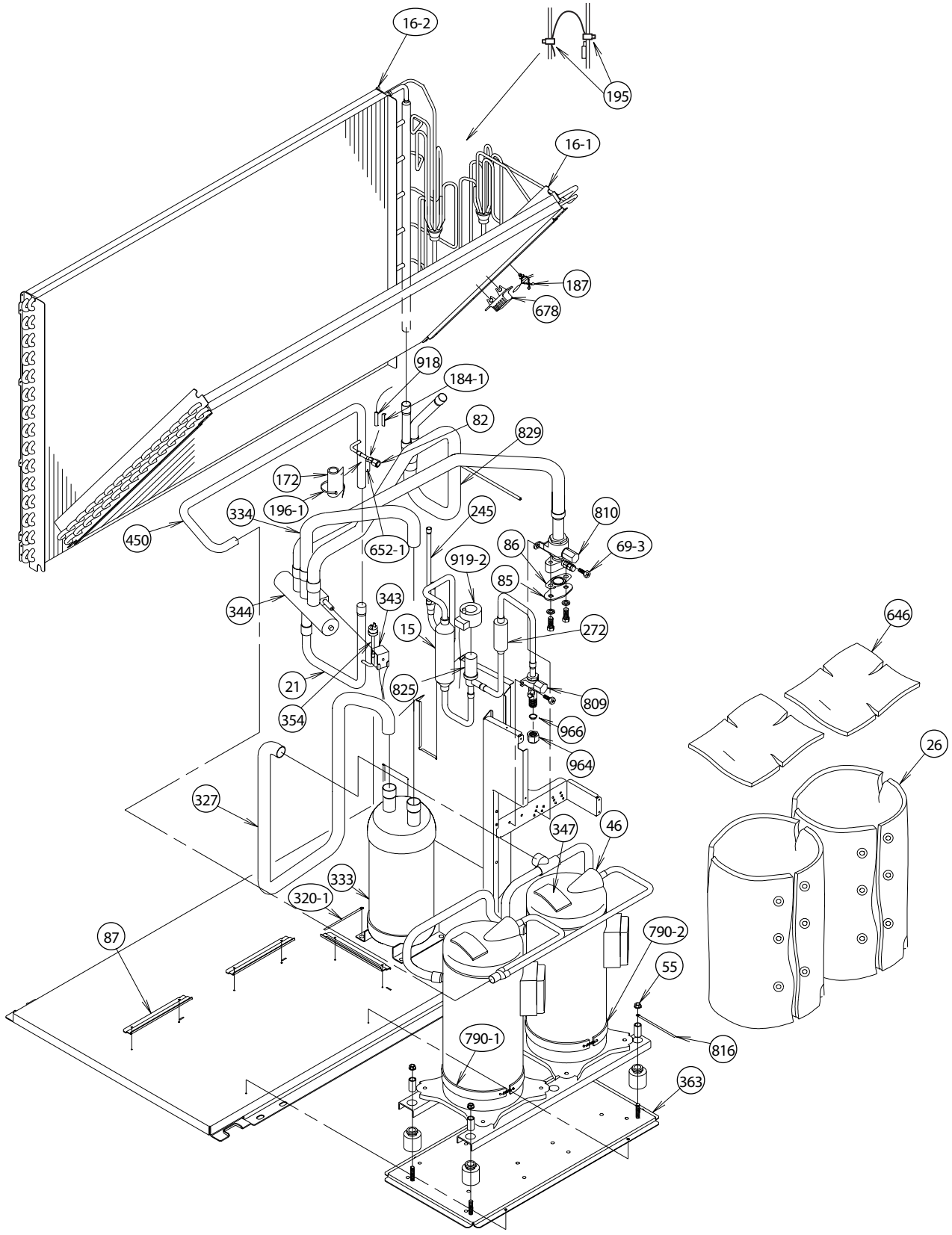

Models : AOG90EPD3L
AOG90TPC3L
AOY90EPD3L
AOY90TPC3L

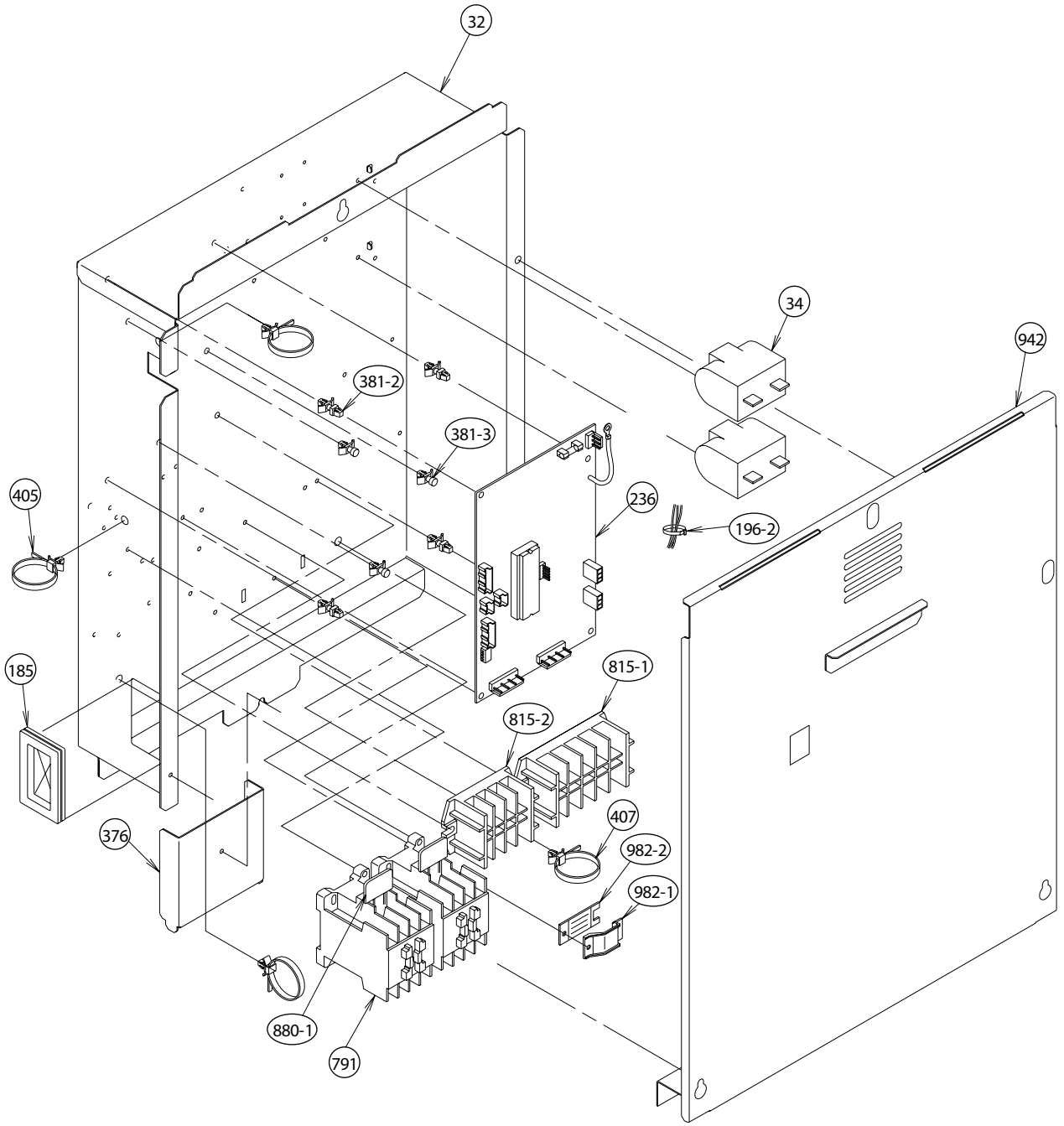

Models : ARG90ELC3
ARG90TLC3
ARY90ELC3
ARY90TLC3

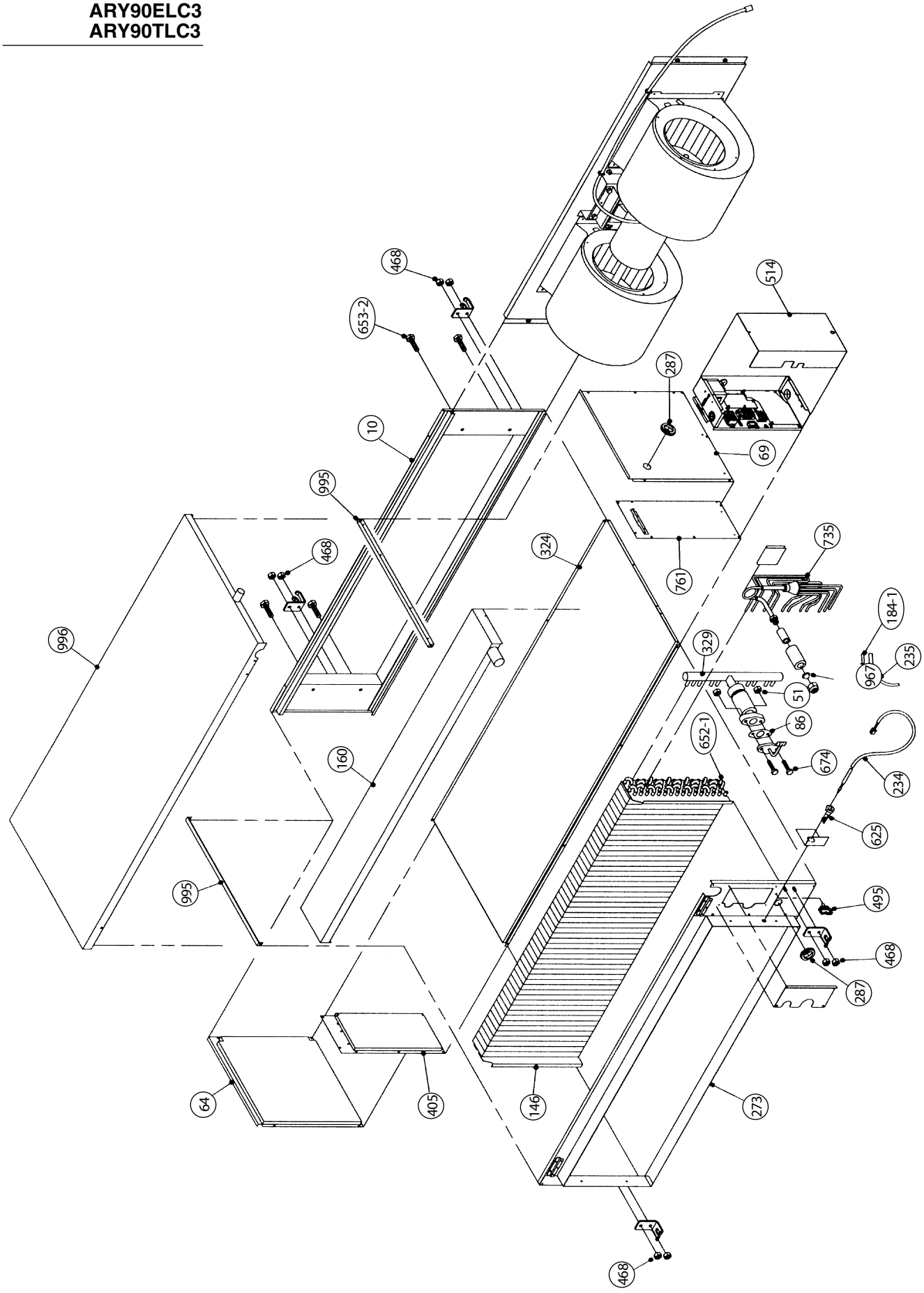

Models : ARG90ELC3
ARG90TLC3
ARY90ELC3
ARY90TLC3

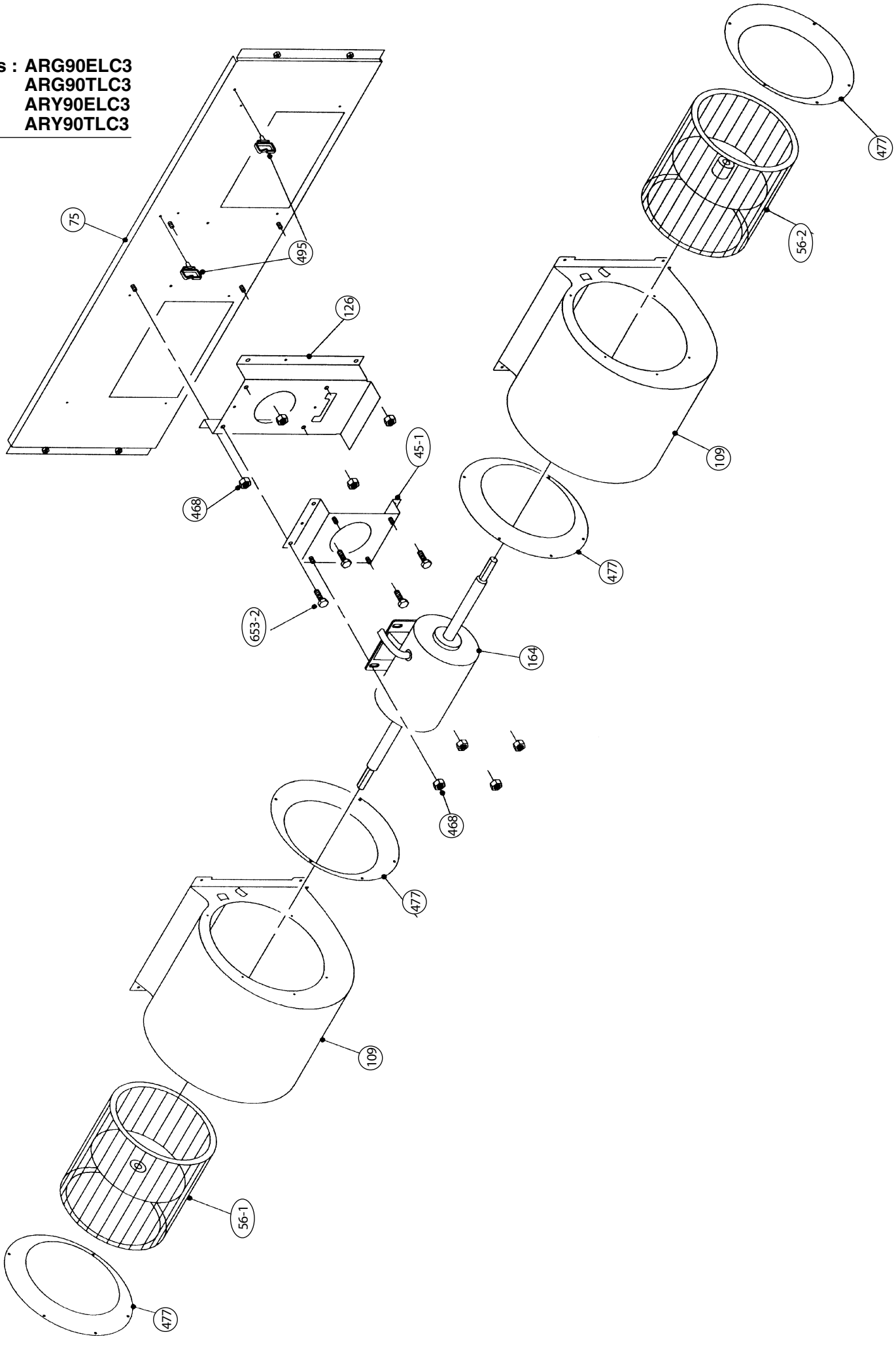

Models : ARG90ELC3
ARG90TLC3
ARY90ELC3
ARY90TLC3

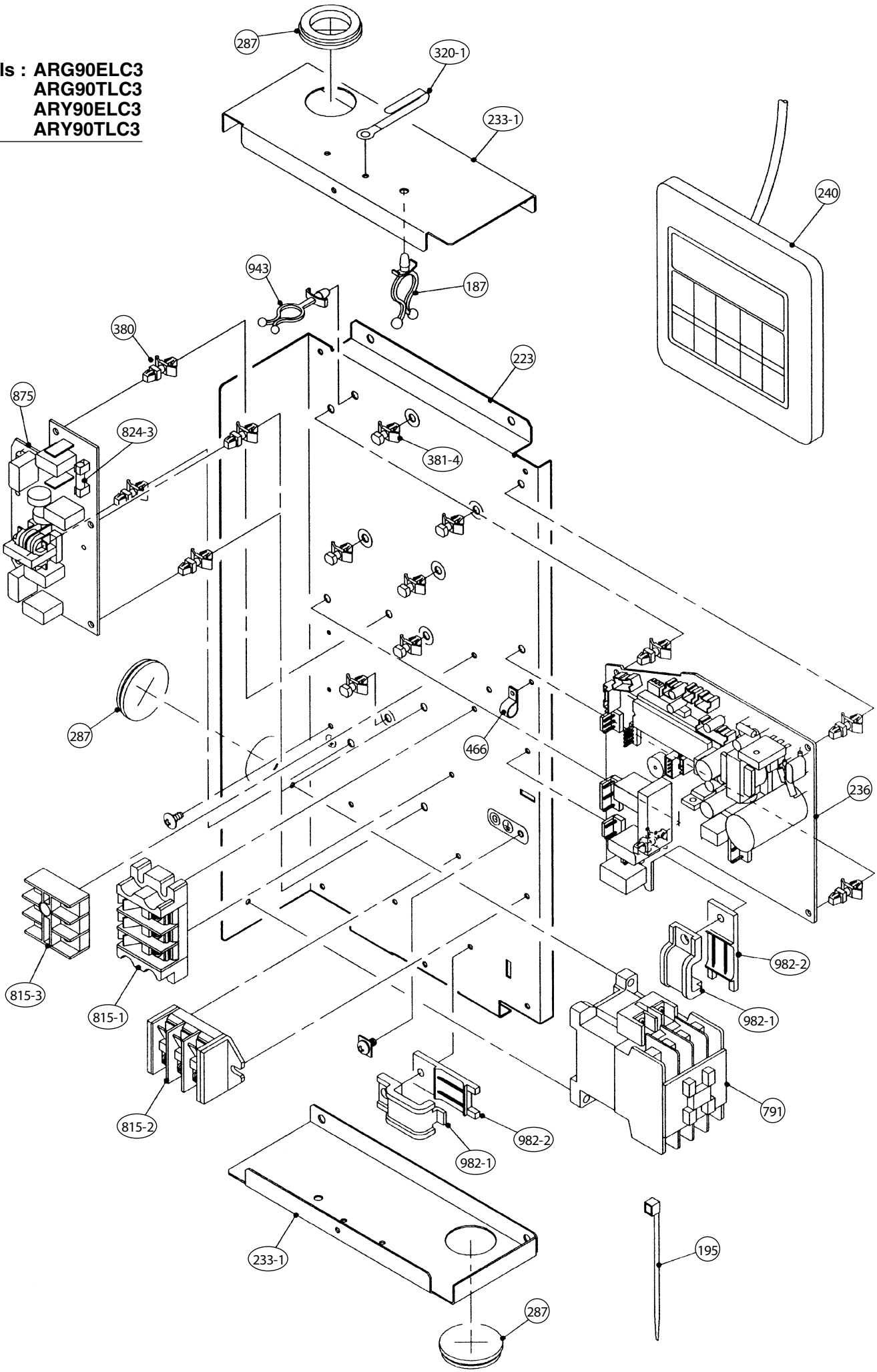

PARTS LIST

INDOOR UNIT

Ref. No.	Description	Part No.		Ord. Q'ty
		ARG90ELC3 ARY90ELC3	ARG90TLC3 ARY90TLC3	
10	Front Panel Assy	9364635002	9364635002	
45-1	Bracket (Motor) Assy	9364630007	9364630007	
51	Nut	0700005091	0700005091	
56-1	Sirocco Fan-R	9364665016	9364665016	
56-2	Sirocco Fan-L	9364665023	9364665023	
64	Left Panel	9364650005	9364650005	
69	Right Panel	9364649009	9364649009	
75	Fan Panel	9364629001	9364629001	
86	Gasket	9363272000	9363272000	
109	Casing Assy	9364660004	9364660004	
126	Motor Plate Assy	9364632001	9364632001	
146	Evaporator Assy	9370825015	9370825015	
160	Drain Pan Assy	9364652023	9364652023	
164	Fan Motor Assy-In	9601004004	9601004004	
184-1	Thermo. Spring-A	313728262708	313728262708	
187	Clamp No.1219	313361271706	313361271706	
195	Clamp SKB-100	313361275805	313361275805	
223	Control Box Metal	9365185001	9365185001	
233-1	Plate (Box)	9365146002	9365146002	
234	Thermistor Assy-Room	9703299056	9703299056	
235	Thermistor Assy-Pipe	9703297021	9703297021	
236	Controller PCB Assy	9704557520	9704557377	
240	Remote Control Unit	9703173066	9371438030	
273	Rear Panel Assy	9364642000	9364642000	
287	Cap (Power)	9352173011	9352173011	
320-1	Wire Clamp Metal	313483219905	313483219905	
324	Top Plate	9364634005	9364634005	
329	Coupling Pipe Assy	9365347003	9365347003	
380	Locking Spacer KGLS-6S	313209391403	313209391403	
381-4	Locking Spacer KGPS-6S	0600118075	0600118075	
405	Panel Side	9364648002	9364648002	
466	Clamp NK-4N	313714328805	313714328805	
468	Nut-A M8	9356998009	9356998009	
477	Bellmouth	9364664002	9364664002	
495	Clamp No.2U46	9352715006	9352715006	
514	Control Box Cover Metal	9365186008	9365186008	
625	Cord Bushing	9359240006	9359240006	
652-1	Therm. Holder Pipe	313806262805	313806262805	
653-2	Bolt HLSJ8025ZV	0700190018	0700190018	
674	Bolt LSM10045	0700145117	0700145117	
735	Distributor Assy	9365343005	9365343005	
761	Side Panel-R Assy	9365147009	9365147009	
791	Magnetic Relay	9900002015	9900002015	
815-1	Terminal 3P	9356488005	9356488005	
815-2	Terminal 3P	9363276046	9363276046	
815-3	Terminal 3P	9703345012	9703345012	
824-3	Fuse	0600222512	0600222512	
875	Filter PCB Assy	9704561145	9704561145	
943	Wire Clamp	0600231019	0600231019	
967	Bonnet-B	313045417959	313045417959	
982-1	Cord Clamp	9356857009	9356857009	
982-2	Cord Clamp-B	9356858006	9356858006	
995	Beam	9364647005	9364647005	
996	Drain Pan (S) Assy	9364893013	9364893013	
-----	Wire With Connector CN7-Power	9362894005	9362894005	

When you order parts, please make a photocopy of this page and fill the number of the parts in the "Order" column.

OUTDOOR UNIT

Ref. No.	Description	Part No. AOG90EPD3L AOY90EPD3L	Part No. AOG90TPC3L AOY90TPC3L	Ord. Q'ty
2	Fan Cover	9366142010	9366142010	
4	Emblem-Rear "FUJITSU"	9371388014	9371388014	
4	Emblem-Rear "GENERAL"	313791088308	313791088308	
9	Rear Panel, Painted	9361712027	9361712027	
12	Base Assy	9372336014	9372336014	
15	Dryer	9369978012	9369978012	
16-1	Condenser-A Assy	9370620016	9370620016	
16-2	Condenser-B Assy	9370621013	9370621013	
20	Discharge Pipe Assy	9365569009	-----	
21	Discharge Pipe - B Assy	-----	9365567005	
26	Compressor Cover-A	9361935006	9361935006	
32	Control Box	9361713000	9361713000	
34	Capacitor (Fan Motor)	9703306037	9703306037	
39	Propeller Fan	9361726000	9361726000	
41	Fan Motor Assy-Outer	9601698012	9601698012	
42	Bracket Panel (Motor)	9361703001	9361703001	
45	Bracket (Motor)	9361701007	9361701007	
46	Compressor Assy	9367378005	9367378005	
55	Special Nut M8	313252257701	313252257701	
69-3	Bolt , Hex.Socket	301210060360	301210060360	
82	Check Joint Assy	9363886009	9363886009	
85	Valve Plate	9363063004	9363063004	
86	Gasket	9363272000	9363272000	
87	Bracket (Compressor)	9361694002	9361694002	
100	Base Foot , Painted	9361688025	9361688025	
117-3	Special Washer M6	313306391007	313306391007	
132	Front Protection Net	9366144014	9366144014	
133	Front Panel - L	9361709027	9361709027	
134	Front Panel - R	9361710047	9361710047	
160	Drain Pan	9361700000	9361700000	
164	Separate Wall - Upper	9361693005	9361693005	
166	Separate Wall - L	9361695009	9361695009	
167	Separate Wall - R	9361696006	9361696006	
172	Pipe Cover	9363470000	9363470000	
176	Bracket (Valve) - A	9368955007	9368955007	
184-1	Thermostat Spring-A	313728262708	313728262708	
185	Rubber Bushing	313005066051	313005066051	
187	Clamp No.1219	313361271706	313361271706	
195	Clamp SKB - 100	313361275805	313361275805	
196-1	Clamp SKB - 3M	312300787605	312300787605	
196-2	Clamp SKB - 150	313035356905	313035356905	
226	Reinforcement (Separate Wall)	9361697003	9361697003	
236	Controller PCB Assy	9704764164	9704764102	
245	Condensing Pipe - M	9367200009	9367200009	
272	Strainer	9361931008	9361931008	
289	Reinforcement (Side Panel)	9361704008	9361704008	
320-1	Wire Clamp Metal	313483219905	313483219905	

Ref. No.	Description	Part No. AOG90EPD3L AOY90EPD3L	Part No. AOG90TPC3L AOY90TPC3L	Ord. Q'ty
327	Suction Pipe - A	9365599006	9365599006	
333	Accumulator	9371828015	9371828015	
334	Suction Pipe - B	----------	9361894006	
343	Solenoid Coil	----------	9703342011	
344	4-Way Valve	----------	9703270000	
347	Noise Insulation - D	313712304109	313712304109	
354	Pressure Switch	9703667008	9703667008	
355	Bracket (Condenser) - L	9361698000	9361698000	
356	Bracket (Condenser) - R	9361699007	9361699007	
361	Bushing	9361725003	9361725003	
363	Bracket Panel (Comp.)	9361691018	9361691018	
376	Bracket (Control Box)	9361727007	9361727007	
381-2	Locking Spacer KGLS-8S	0600035020	0600035020	
381-3	Locking Spacer KGPS-8S	0600118051	0600118051	
405	Clamp No.1763	313816345304	313816345304	
407	Clamp(Cable) No.1259	313739340109	313739340109	
450	Discharge Pipe - A	-----	9367217007	
477	Bellmouth	9361721005	9361721005	
527	Condenser Guard	9366143017	9366143017	
646	Compressor Cover - B	9361936003	9361936003	
652-1	Thermistor Holder Pipe	313714262805	313714262805	
653	Bolt, For Fan Motor	0700145087	0700145087	
678	Bracket (Thermistor)	313557406106	313557406106	
761	Side Panel - R, Painted	9361706026	9361706026	
762	Side Panel - L, Painted	9361705029	9361705029	
790-1	Belt Heater - A	9361140042	9361140042	
790-2	Belt Heater - B	9361140059	9361140059	
791	Magnetic Relay	9900078010	9900078010	
809	Ball Valve - A	9371799025	9371799025	
810	Ball Valve - B	9361938007	9361938007	
815-1	Terminal 5P	9363275018	9363275018	
815-2	Terminal 4P	9363276015	9363276015	
816	Wire Clamp Metal	313584219902	313584219902	
825	Expansion Valve Assy	9366558002	9365566008	
829	Joint Pipe Assy	9362922005	9361886001	
880-1	Network (C - R)	9700987017	9700987017	
918	Thermistor Assy	9900125011	9900125011	
919-2	Expansion Valve Coil	9361930001	9361930001	
942	Control Box Cover	9361716001	9361716001	
949-1	Screw, Painted	9305648009	9305648009	
949-2	Screw, Painted	9302348001	9302348001	
964	Flare Nut	9371800028	9371800028	
966	Bonnet	9371801025	9371801025	
982-1	Cord Clamp	9356857009	9356857009	
982-2	Cord Clamp - B	9356858006	9356858006	

When you order parts, please make a photocopy of this page and fill the number of the parts in the "Order" column.

STANDARD ACCESSORIES

OUTDOOR UNIT ACCESSORIES

Name and Shape	Q'ty	Application	AOG90EPD3L AOY90EPD3L AOG90TPC3L AOY90TPC3L
Flange joint assembly 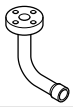	1	For connecting the piping	9363035001
Coupler heat insulation 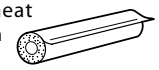	1	For outdoor side pipe joint	9363828009
Gasket 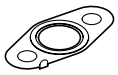	1	Installation between flange joint assembly and valve B	9363272000
Bolt	2	For fixing the flange joint assembly	0700145100
Drain pipe 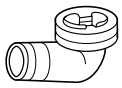	3	For outdoor unit drain piping work (Reverse cycle model only)	9301102000

INDOOR UNIT ACCESSORIES

Name and Shape	Q'ty	Application	ARG90ELC3 ARY90ELC3	ARG90TLC3 ARY90TLC3
Remote control unit	1	Use for air conditioner operation	9703173066 (EZ-0001WSE-R)	9371438030 (EZ-0001HSEFR)
Flange joint 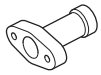	1	For connecting the piping	9365352007	9365352007
Gasket 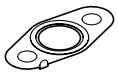	1	Installation between flange joint and indoor unit	9363272000	9363272000
Special nut A (Large flange)	4	For suspending the indoor unit from ceiling	313005446653	313005446653
Special nut B (Small flange)	4		313005446759	313005446759
Washer	8		9364938004	9364938004
Coupler heat insulation 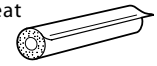	1	For indoor side pipe joint (small)	9350716029	9350716029
Flange joint insulation 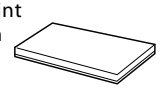	1	For indoor side pipe joint (large)	9364937007	9364937007
Binder (Large) 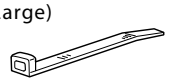	1	For fixing the connection pipe (Large and small)	9366156000	9366156000
Binder (Small) 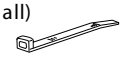	1	For fixing the remote control unit cord	313361275805	313361275805
Remote control unit cord clamp 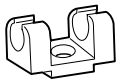	10	For installing the remote control unit cord	313714181904	313714181904
Screw	10	For installing the remote control unit cord clamp	301141153027	301141153027
	2	For installing the remote control unit	301141134166	301141134166